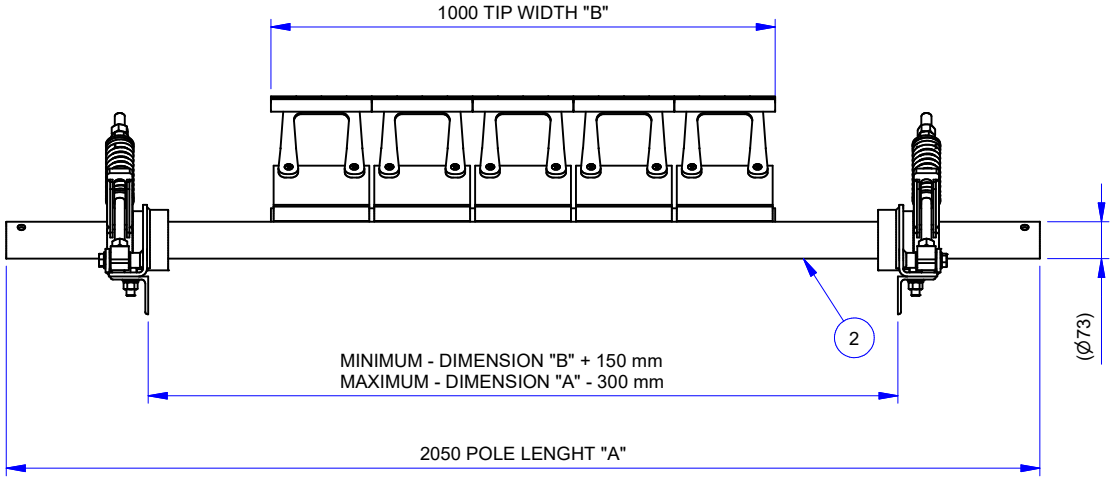

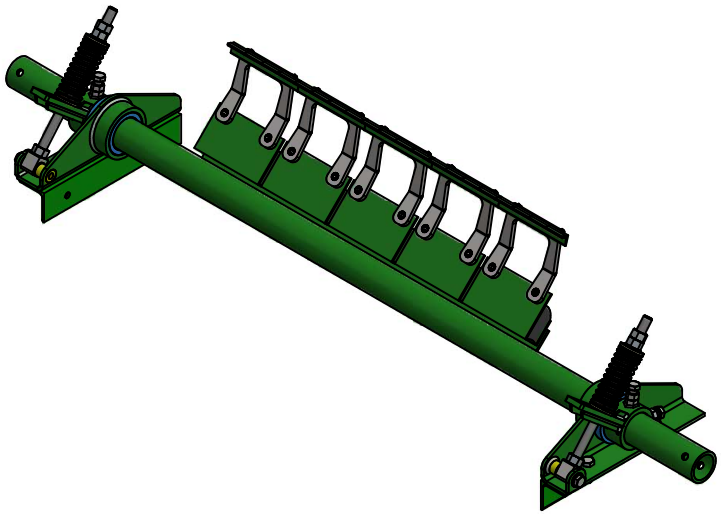

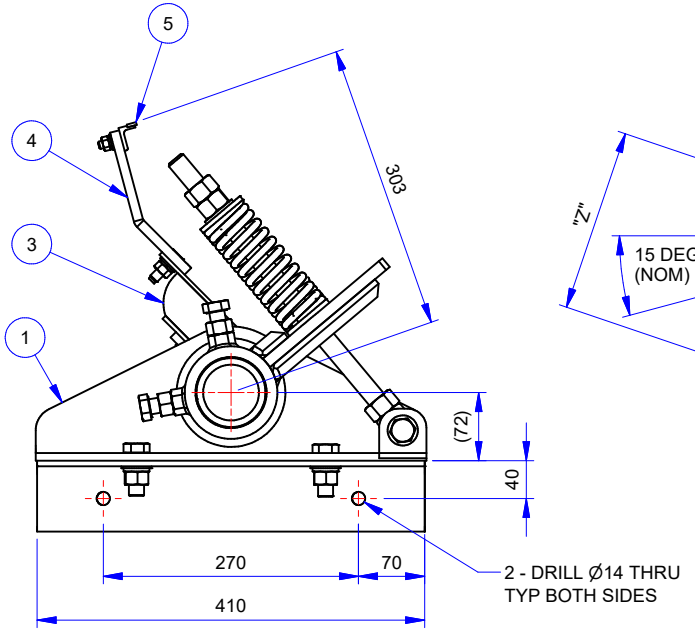

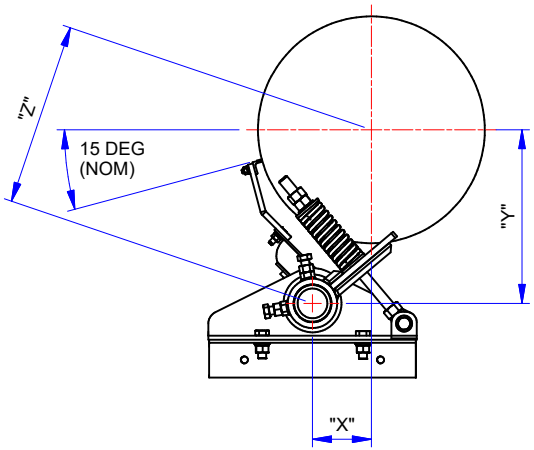

NOTES:
1) REFER TO THE "HSCT - BELT CLEANER IOMM" FOR FULL INSTALLATION, OPERATION AND MAINTENANCE INSTRUCTIONS
2) DIMENSIONS "X", "Y" AND "Z" - THESE DIMENSIONS ARE DEPENDANT ON THE BELT THICKNESS AND PULLEY DIAMETER, REFER TO THE "IOMM" FOR FULL DETAILS
3) THE TIP IS DESIGNED TO PERFORM CORRECTLY WHEN THE TIP MEETS THE BELT AT 90 deg (NOM), 15 deg (NOM) BELOW THE CENTRE LINE OF THE PULLEY. REFER TO THE "IOMM" FOR FULL DETAILS

ITEM	ITEM CODE	DESCRIPTION	QTY
5	110048	TUNGSTEN TIP	5
4	110049	SUSPENSION ARMS - SS	5
3	110047	CUSHION, STANDARD	5
2	110164	H -POLE 1050mm - 73 mm DIA	1
1	110159	HCST-HD TENSIONER LH (GOLD SPRING) COMPLETE (OPTIONAL)	REF
1	110158	HCST-HD TENSIONER RH (BLACK SPRING) COMPLETE	1

© 2016 BELLE BANNE CONVEYOR PRODUCTS
ALL RIGHTS RESERVED

THIS DOCUMENT (DRAWING) AND THE DATA SHOWN THEREON IS THE PROPERTY AND CONFIDENTIAL INFORMATION OF BELLE BANNE CONVEYOR PRODUCTS. DO NOT USE, COPY OR REPRODUCE IN ANY MANNER OR FOR ANY PURPOSE WHATSOEVER, WITHOUT THE PRIOR WRITTEN CONSENT OF BELLE BANNE CONVEYOR PRODUCTS.

GENERAL NOTES

1. WELDING SYMBOLS STANDARD TO ISO 2553 METHOD A.
2. REMOVE ALL BURRS AND SHARP EDGES
3. ALL DIMENSIONS IN MILLIMETERS UNLESS OTHERWISE STATED.
4. THIRD ANGLE PROJECTION

REV	DESCRIPTION	BY	DATE
1	SIDE ASSEMBLIES UPDATED	NL	17/01/2018

ORDERING NUMBER	HBB1050SS-HCST		
PLATE INDICATOR		MATERIAL CODE	
ESTIMATED WEIGHT	68	WEIGHT UNITS	kg
SIMILAR TO		MACHINE MODEL	
ORIGINAL BY	NLindley		
REVISED BY	NLindley		
ORIGINAL DATE	2/06/2017	REVISED DATE	17/01/2018
CHANGE NO.		VERSION	1
DRAWING USE		SCALE	1:7.5. 1:4
CAD SYSTEM	INVENTOR	SHEET	1 OF 1

A2

BELLE BANNE CONVEYOR PRODUCTS

DESCRIPTION

HCST - BELT CLEANER, MILD STEEL

1050 mm BELT WIDTH, SIZE SS ARMS

ITEM. CODE. 110210

Belle Banne conveyor products
www.bbcp.com.au
e-mail info@bbcp.com.au